



KEMIO HEAVY METALS

Kemio Heavy Metals is a lightweight and durable water analysis instrument which uses electrochemical sensor technology to detect various heavy metal contaminants in water samples. Kemio Heavy Metals is widely adopted in humanitarian water and drinking water applications where testing is required at source to determine contamination levels.

For testing parameters
See page 56







Cloud Connectivity

Convenient results logging via the instrument or Connect equips users with traceable and auditable data, essential for demonstrating compliance.

Effortless Simplicity

Results can be obtained in as little as three minutes, enabling a rapid response to potential contaminated water sources, ensuring timely intervention and mitigation.

Rugged Durability

The kit is designed to be lightweight and durable, making it suitable for use in the most challenging or remote environments anywhere in the world.

Trusted Reliability

Accurate and precise testing provides peace of mind and confidence in the reliability of results, eliminating the delays associated with laboratory test results and ensuring immediate decision-making.

COMPATIBLE WITH

connect By Palintest

Soft Case – Kit Contents



ORDERING INFORMATION

PRODUCT CODE: KEMS15HM

Sensors ordered separately – see page 56 for order details.

Technical Specification

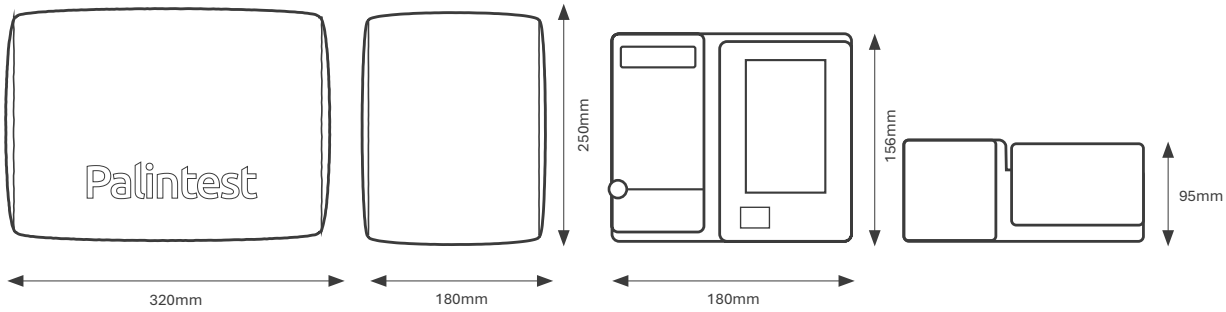

Measuring System	Anodic Stripping Voltammetry (ASV)
Temperature Range	Ambient range: 0˚C-50˚C
Display	High Clarity LCD Screen
User Interface	Touchscreen
Language Options	English, French, Spanish and Chinese (Simplified)
Connectivity	USB C
Information Input	Barcode Scanner, on- screen keyboard/keypad
Data Storage	10,000 test results and information
Instrument Weight	1.012kg
Kit Weight	2.07kg
Battery	2399mAh NiMH Rechargeable Battery Pack
Power Supply	USB Power
Rating	IP67

Sensors & Liquid Reagents

Parameter	Sensor / Consumable	Range	Temp	Part Code	Qtys	Compatible with		
						Kemio DIS	Kemio HM	Kemio Multi
Ammonia	Ammonia Low Range	0.2-2 mg/L	5-50 °C	KEM21ALR	100	●		●
	Ammonia High range	0.5-15 mg/L	5-30 °C	KEM21AHR	100	●		●
Arsenic	Total Arsenic	2-250 µg/L	10-35 °C	KEM100M-TAS	100		●	●
	Speciated Arsenic	2-250 µg/L	10-35 °C	KEM100M-SAS	100			
Bromine	Bromine	0.2-10 mg/L	5- 30°C	KEM21BRS	100	●		●
Cadmium	Cadmium	0.2-10 mg/L	5 - 35°C	KEM22MCD	10		●	●
Chlorine	Free Chlorine FHR	0.1-100 mg/L	2 - 20°C	KEM21FHR	100	●		●
				KEM25FHR	500			
	Free and Total Chlorine CLO	0.02-10 mg/L FC 0.02-75 mg/L TC	5-30 °C	KEM21CLO	100	●		●
				KEM25CLO	500			
	Free and Total Chlorine CHR	0.1-25 mg/L FC 1-500 mg/L TC	5 - 25°C 5 - 30°C	KEM21CHR	100	●		●
				KEM25CHR	500			
	Free and Total Chlorine CLT	0.1-25 mg/L FC 1-500 mg/L TC	2 - 15°C	KEM21CLT	100	●		●
				KEM25CLT	500			
Chlorine Dioxide & Chlorite	Chlorine Dioxide & Chlorite (CDX)	0.02-50 mg/L	5 - 40°C	KEM20CDX	Starter Pack	●		●
				KEM21CDX	100			
				KEM25CDX	500			
	CR-1 Reagent	-	-	PT546	25			
	CR-2 Reagent	-	-	PT547	25			
	Glycine Reagent	-	-	PT549	25			
Chlorine Dioxide	Chlorine Dioxide	0.02-50 mg/L	5 - 40°C	KEM20CDX	Starter Pack	●		●
				KEM21CDX	100			
				KEM25CDX	500			
	Glycine Reagent	-	-	PT549	25			
Copper	Copper	100-2000µg/L	5 - 35°C	KEM22MCU	10		●	●
Lead	Lead	1-1000 mg/L TC	5 - 35°C	KEM22MPB	10		●	●
Peracetic Acid	Peracetic Acid (PAA)	5-2000mg/L	5 - 30°C	KEM21PAA	100	●		●
				KEM25PAA	500			
	Peracetic Acid Low Range (PAL)	0.02-10 mg/L	2-30°C	KEM21PAL	100	●		●
				KEM25PAL	500			
	Peracetic Acid High Range (PAH)	400-4000mg/L	10-60 °C	KEM21PAH	100	●		●
				KEM25PAH	500			
Monochloramine	Monochloramine	0.2-5 mg/L	5-50 °C	KEM21MOA	100	●		●